USX-1620-A

UNDERMOUNT GROUP

GENEROUS CAPACITY - SINGLE COMPARTMENT

DEEP - 18 GAUGE

SUBMITTAL DATA

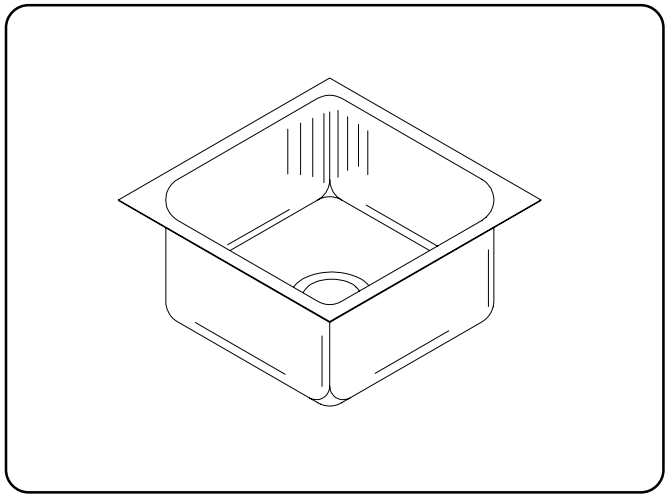

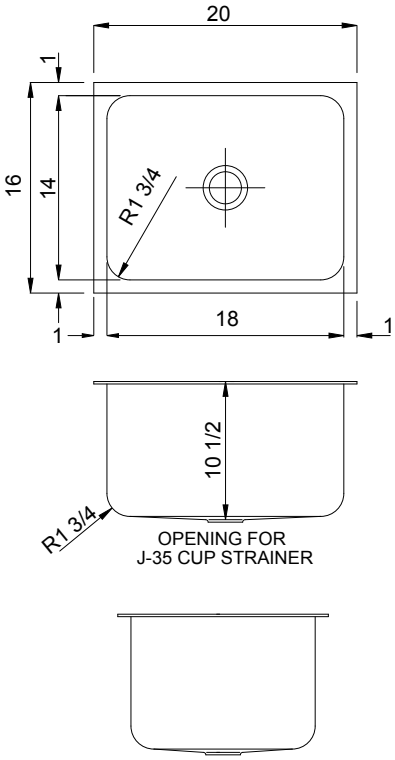

SPECIFICATION

Seamless die-drawn construction of 18 gauge, type 304, 18-8 stainless steel. Interior and top surfaces polished to a Hand-Blended Just Finish with highlighted bowl rim. Fully coated underside insulates for sound and reduces condensation. Straight-sided compartment with 1-3/4" radius corners provides greater capacity. Conforms to ASME/ANSI A112.19.3M. Drain punched for Just J-35 drain.

11.16 Gallon Capacity

Capacity Matters

Max ID sizing with straight sided bowl configuration (non tapered sides). Tight corner radius design.

APPROVED FOR MANUFACTURING

MODEL NO.: USX-1620-A QTY: _____

JOB NAME: _____

TAG/ITEM: _____

CUSTOMER: _____

SIGNATURE: _____

MADE IN U.S.A.

RECYCLED STAINLESS *THE VALUE OPTION*

FUNCTIONAL DESIGN, QUALITY, AND SPECIFICATIONS LISTED DESCRIBE THE JUST STANDARD OF QUALITY. WHEN MAKING COMPARISONS WITH OTHER OFFERINGS, INSIST ON THE JUST QUALITY OF CONSTRUCTION. FOR ADDITIONAL INFORMATION REGARDING THE COMPLETE LINE OF ***JUST*** SINKS, FAUCETS AND DRAINS, VISIT OUR WEB SITE AT **www.justmfg.com**

JUST MANUFACTURING COMPANY

9233 KING STREET . FRANKLIN PARK . ILLINOIS . 60131-2111

PH: 847-678-5150 . FAX: 847-678-6817

E-MAIL: custserv@justmfg.com . www.justmfg.com

© 2007-2013-JUST MFG-REVISED-11/2013