US-ADA-1618-A - 18 GA.

UNDERMOUNT GROUP

ADA COMPLIANT
SINGLE COMPARTMENT

SUBMITTAL DATA

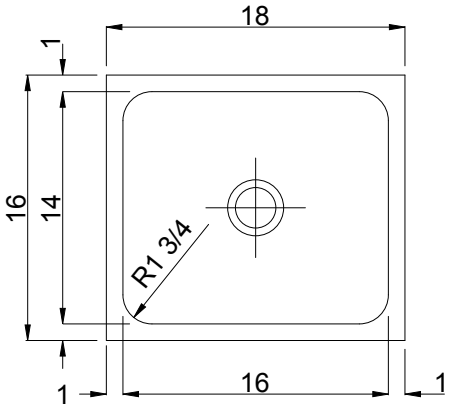

OPENING FOR
J-35 CUP STRAINER

ADA
COMPLIANT

SPECIFICATION

Seamless die-drawn construction of 18 gauge, type 304, 18-8 stainless steel. Interior and top surfaces polished to a non-porous Hand-blended Just Finish with highlighted bowl rim. Smooth, fully coated underside insulated for sound and reduces condensation. Straight-sided compartment with radius corners provides greater capacity. Drain punched for J-35 drain. Certified to ASME A112.19.3/CSA B45.4, Canadian Standards Association (CSA), Uniform Plumbing Code (UPC) and International Plumbing Code (IPC).

5.11 Gallon Capacity*

Capacity Matters
Max ID sizing with straight sided bowl configuration (non tapered sides). Tight corner radius design.

**Capacity is based on 5-1/2" Depths*

To Be Specified:			
DRAIN LOCATION:			
☐ CENTER (SHOWN)		☐ LEFT REAR	
☐ RIGHT REAR		☐ CENTER REAR	
LOCATIONS MUST BE A MINIMUM OF 4 1/2" FROM THE BOWL WALL.			
DEPTH - MUST BE SPECIFIED:			
☐ 4 1/2" DEEP	☐ 5" DEEP	☐ 5-1/2" DEEP	

APPROVED FOR MANUFACTURING

MODEL NO.: **US-ADA-1618-A** QTY: _____

JOB NAME: _____

TAG/ITEM: _____

CUSTOMER: _____

SIGNATURE: _____

MADE IN U.S.A.

JUST MFG. COMPANY CONTINUES TO MAKE QUALITY AND FUNCTIONALITY A MARK OF THE JUST PRODUCT LINE. TO DO SO REQUIRES THAT WE RESERVE THE RIGHT TO CHANGE PRODUCT INFORMATION WITHOUT NOTICE. DIMENSIONS MAY VARY AND ARE SUBJET TO CHANGE WITHOUT NOTICE. NO RESPONSIBILITY IS ASSUMED FOR USE OF SUPERCEDED OR VOIDED DATA. FOR THE MOST CURRENT AND ACCURATE INFORMATION REGARDING THE COMPLETE LINE OF JUST SINKS, FAUCETS AND DRAINS, CLICK ON THE ***SPEC LINE DRAWINGS*** LINK ON OUR WEB SITE AT ***www.justmfg.com***

JUST MANUFACTURING COMPANY 9233 KING STREET . FRANKLIN PARK . ILLINOIS . 60131-2111
PH: 847-678-5150 . FAX: 847-678-6817 . E-MAIL: custserv@justmfg.com . www.justmfg.com

©2007-2013-JUST MFG