T&S BRASS AND BRONZE WORKS, INC.

2 Saddleback Cove / P.O. Box 1088
Travelers Rest, SC 29690

Travelers Rest, SC: 800-476-4103 • Simi Valley, CA: 800-423-0150 • Fax: 864-834-3518 • www.tsbrass.com

Model No.

EC-3101-TMV

Item No.

ADA Compliant

T&S ChekPoint™

This Space for Architect/Engineer Approval

Job Name_____ Date_____

Model Specified_____ Quantity_____

Customer/Wholesaler_____

Contractor_____

Architect/Engineer_____

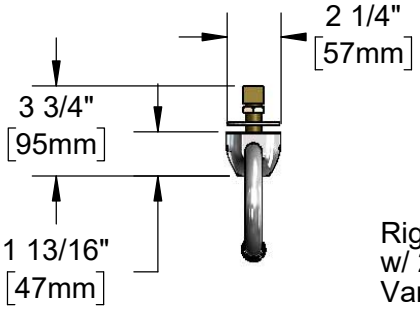

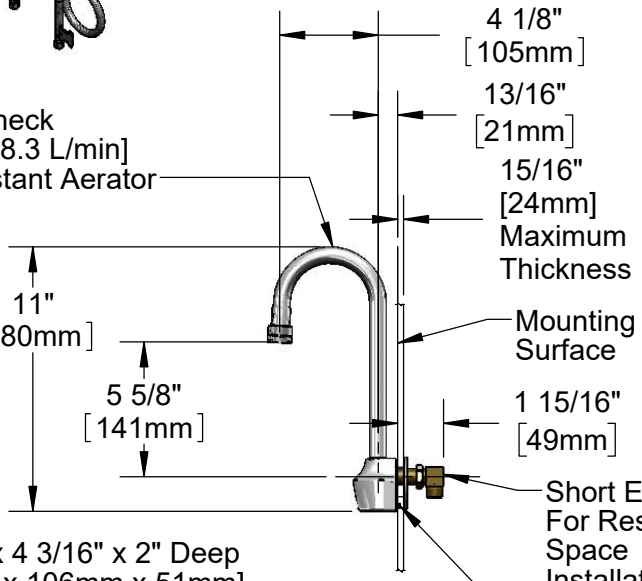

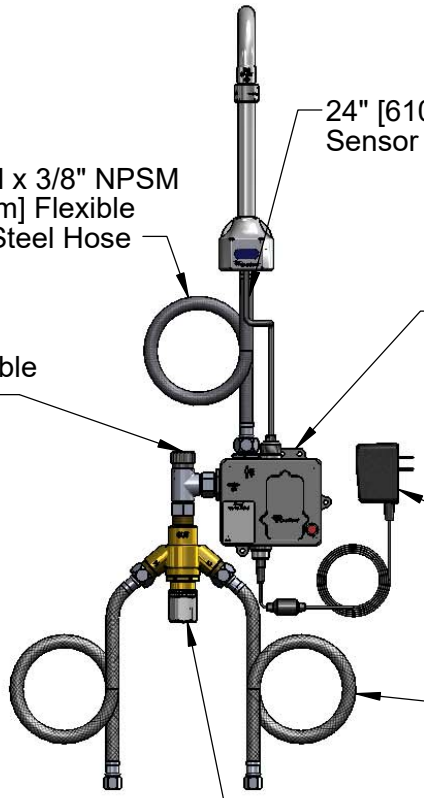

Mounting Hole Detail

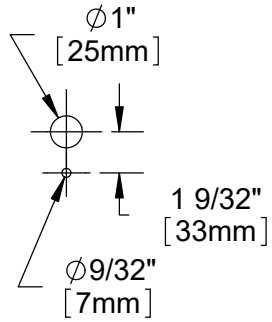

Product Specifications:

Chrome Plated Brass Electronic Faucet:
Wall Mt. Rigid Gooseneck w/ 2.2 GPM VR Aerator, AC/DC Control Module w/ Internal Flow Control Setting Switches, Thermostatic Temperature Control Mixing Valve w/ Check Valves, 18" Hot & Cold Supply Stop Flexible Connector Hoses

Product Compliance:

ASME A112.18.1 / CSA B125.1
NSF 61 - Section 9
NSF 372 (Low Lead Content)
ANSI A117.1 (ADA)
UL 1951
ASSE 1070 (TMV)

Drawn: AMG	Checked: JRM	Approved: JHB	Date: 09/10/18	Scale: 1:8	Sheet: 1 of 2

T&S BRASS AND BRONZE WORKS, INC.

2 Saddleback Cove / P.O. Box 1088
Travelers Rest, SC 29690

Travelers Rest, SC: 800-476-4103 • Simi Valley, CA: 800-423-0150 • Fax: 864-834-3518 • www.tsbrass.com

Model No.

EC-3101-TMV

Item No.

ITEM NO.	SALES NO.	DESCRIPTION
1	B-0199-06	VR Aerator w/ Key
2	044A	3/8" to Aerator Adapter
3	006575-45	-015 O-Ring
4	017195-45	Angled Sensor w/ Cable
5	016325-45	Inlet Hose, Faucet, 1/2" NPSM-F x 3/8" NPSM-F
6	016647-45	
7	EC-FILTER	Replacement Filter
8	5EF-0002	A/C Transformer
9	EC-TMV	ASSE 1070 Thermostatic Mixing Valve
10	5EF-0005	Supply Hose, 9/16-24 Female x 1/2" NPSM
11	015425-45	Vandal Resistant Key

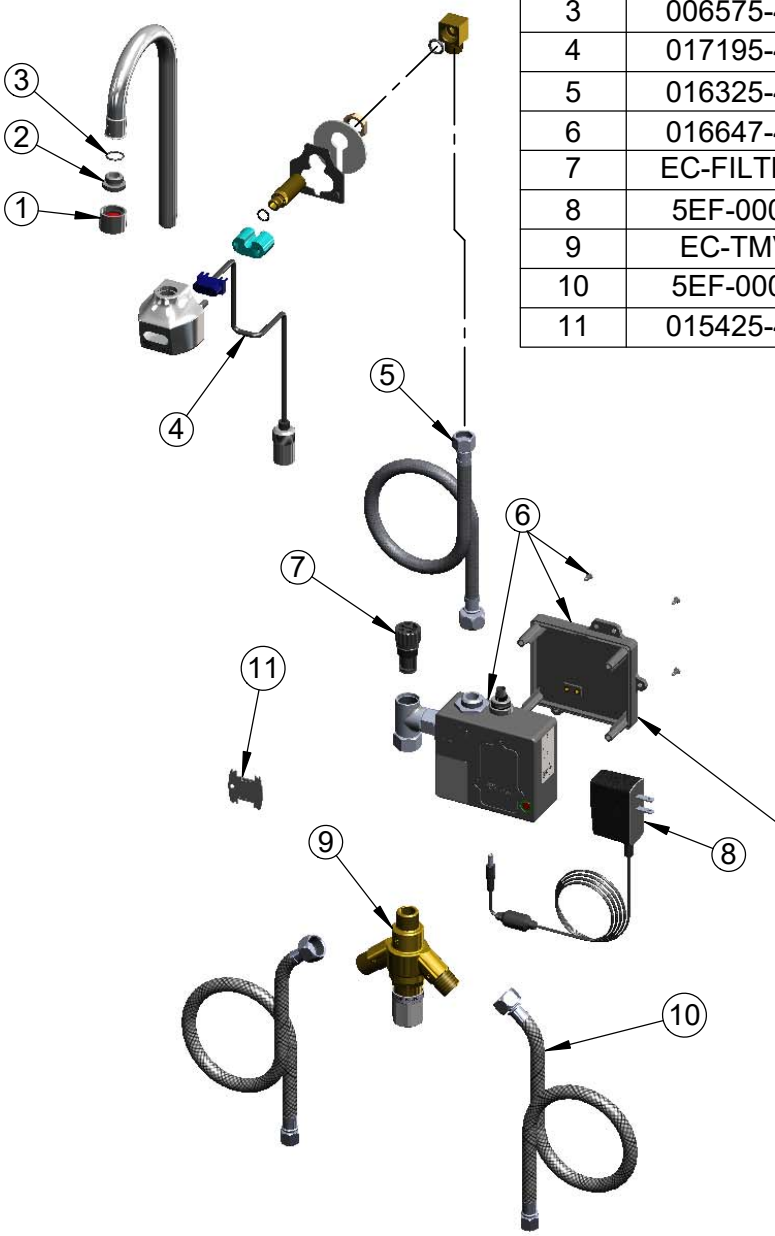

A Maximum of (8) ChekPoint Faucets can be Hardwire Connected and Powered by EC-HARDWIRE ChekPoint Hardwire AC Transformer. (Sold Separately)

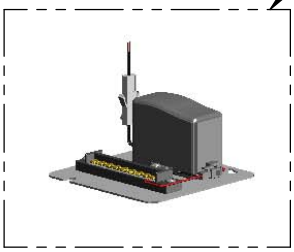

Label for Flow Control Switch Settings is Located on Inside of Back Cover.

Flow Control Switches are Located Inside Module Housing in Black Box Next to Battery Compartment.
*Switches are Set to DEFAULT Position:
- Auto Time Out = 15 Seconds
- Shut Off Delay = 1 Second
- Auto Flush = OFF

Remove (4) Screws and Back Cover to Access Switches.

*Available Water Flow Control Selections:
- Auto Time Out: 15 sec, 30 sec, 45 sec, 60 sec, 3 min, 20 min
- Shut Off Delay: 1 sec, 10 sec, 15 sec, 30 sec
- Auto Flush (30 Seconds After Every 12 Inactive Hours): ON or OFF

Product Specifications:

Chrome Plated Brass Electronic Faucet:
Wall Mt. Rigid Gooseneck w/ 2.2 GPM VR Aerator, AC/DC Control Module w/ Internal Flow Control Setting Switches, Thermostatic Temperature Control Mixing Valve w/ Check Valves, 18" Hot & Cold Supply Stop Flexible Connector Hoses

Product Compliance:

ASME A112.18.1 / CSA B125.1
NSF 61 - Section 9
NSF 372 (Low Lead Content)
ANSI A117.1 (ADA)
UL 1951
ASSE 1070 (TMV)

Drawn: AMG	Checked: JRM	Approved: JHB	Date: 09/10/18	Scale: NTS	Sheet: 2 of 2