T&S BRASS AND BRONZE WORKS, INC.

2 Saddleback Cove / P.O. Box 1088
Travelers Rest, SC 29690

REG. #A2601
ISO #9001

Travelers Rest, SC: 800-476-4103 • Simi Valley, CA: 800-423-0150 • Fax: 864-834-3518 • www.tsbrass.com

Model No.
B-0894

Item No.

This Space for Architect/Engineer Approval

Job Name_____Date_____

Model Specified_____ Quantity_____

Customer/Wholesaler_____

Contractor_____

Architect/Engineer_____

ADA Compliant

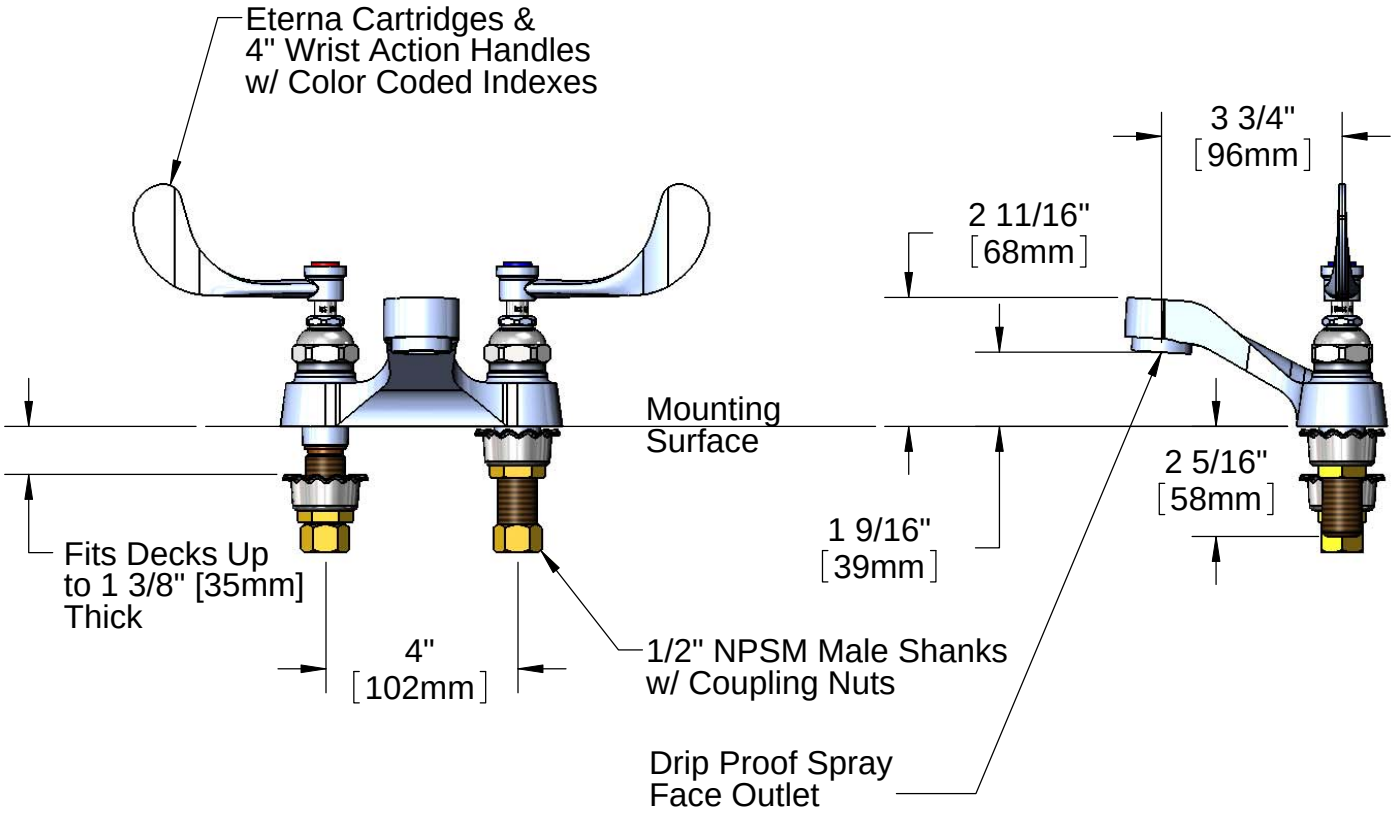

Note: Rough-In Requirement
(2) Ø 1 1/8" [29mm] Mounting Holes

Product Specifications:
4" Mixing Faucet w/ Eterna Cartridges, Drip Proof Spray Face Outlet, 4" Wrist Action Handle & 1/2" NPSM Male Shank Inlets

Drawn	Checked	Approved
DHL	KJG	JHB
Scale: 1:4		Date: 04/11/11

T&S BRASS AND BRONZE WORKS, INC.

2 Saddleback Cove / P.O. Box 1088
Travelers Rest, SC 29690

Travelers Rest, SC: 800-476-4103 • Simi Valley, CA: 800-423-0150 • Fax: 864-834-3518 • www.tsbrass.com

REG. #A2601
ISO #9001

Model No.
B-0894

Item No.

ITEM NO.	SALES NO.	DESCRIPTION
1	000921-45	Flat Head Screw
2	010574-25	Drip Proof Spray Face
3	001018-45	Santoprene Washer
4	006010-40	Eterna Cartridge (RTC)
5	B-WH4	4" Wrist Action Handle
6	001194-45	Red HW Index
7	001686-45	Blue CW Index
8	000925-45	Lab Handle Screw
9	006009-40	Eterna Cartridge (LTC)
10	001000-45	Rosette Washer
11	002954-45	Shank Lock Nut
12	000958-20	Coupling Nut

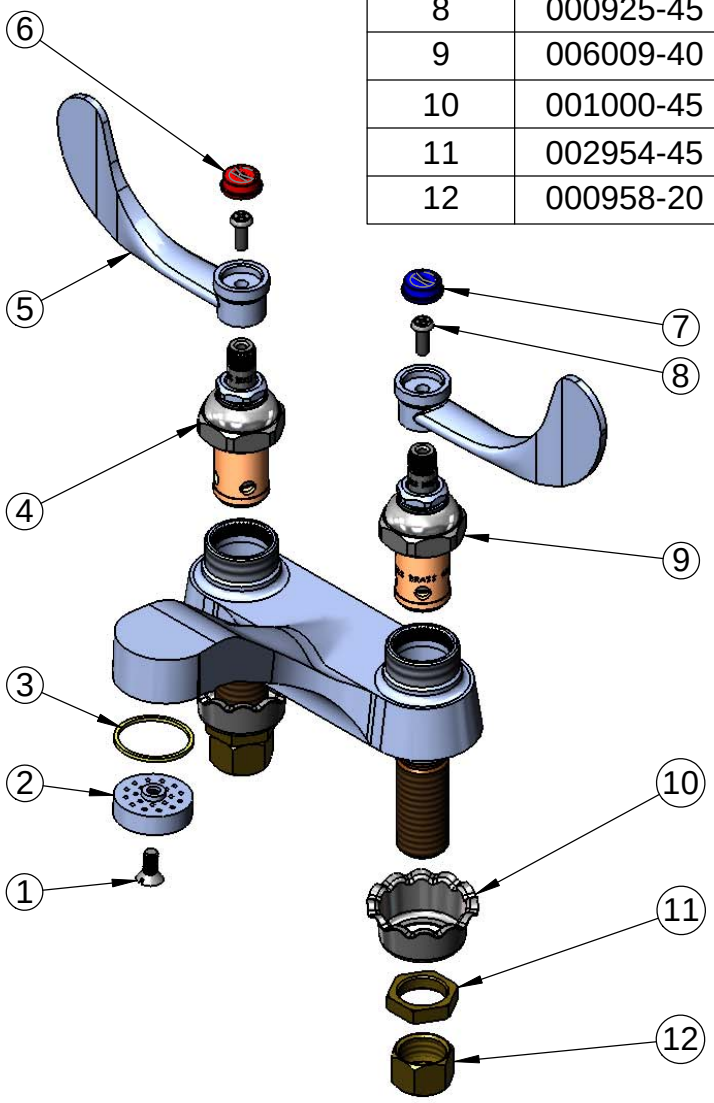

Product Specifications:
4" Mixing Faucet w/ Eterna Cartridges, Drip Proof Spray Face Outlet, 4" Wrist Action Handle & 1/2" NPSM Male Shank Inlets

Drawn	Checked	Approved
DHL	KJG	JHB
Scale: NTS		Date: 04/11/11