T&S BRASS AND BRONZE WORKS, INC.

2 Saddleback Cove / P.O. Box 1088
Travelers Rest, SC 29690

Travelers Rest, SC: 800-476-4103 • Simi Valley, CA: 800-423-0150 • Fax: 864-834-3518 • www.tsbrass.com

Model No.

B-0208-CR-HW

Item No.

ADA Compliant

This Space for Architect/Engineer Approval

Job Name_____Date_____

Model Specified_____ Quantity_____

Customer/Wholesaler_____

Contractor_____

Architect/Engineer_____

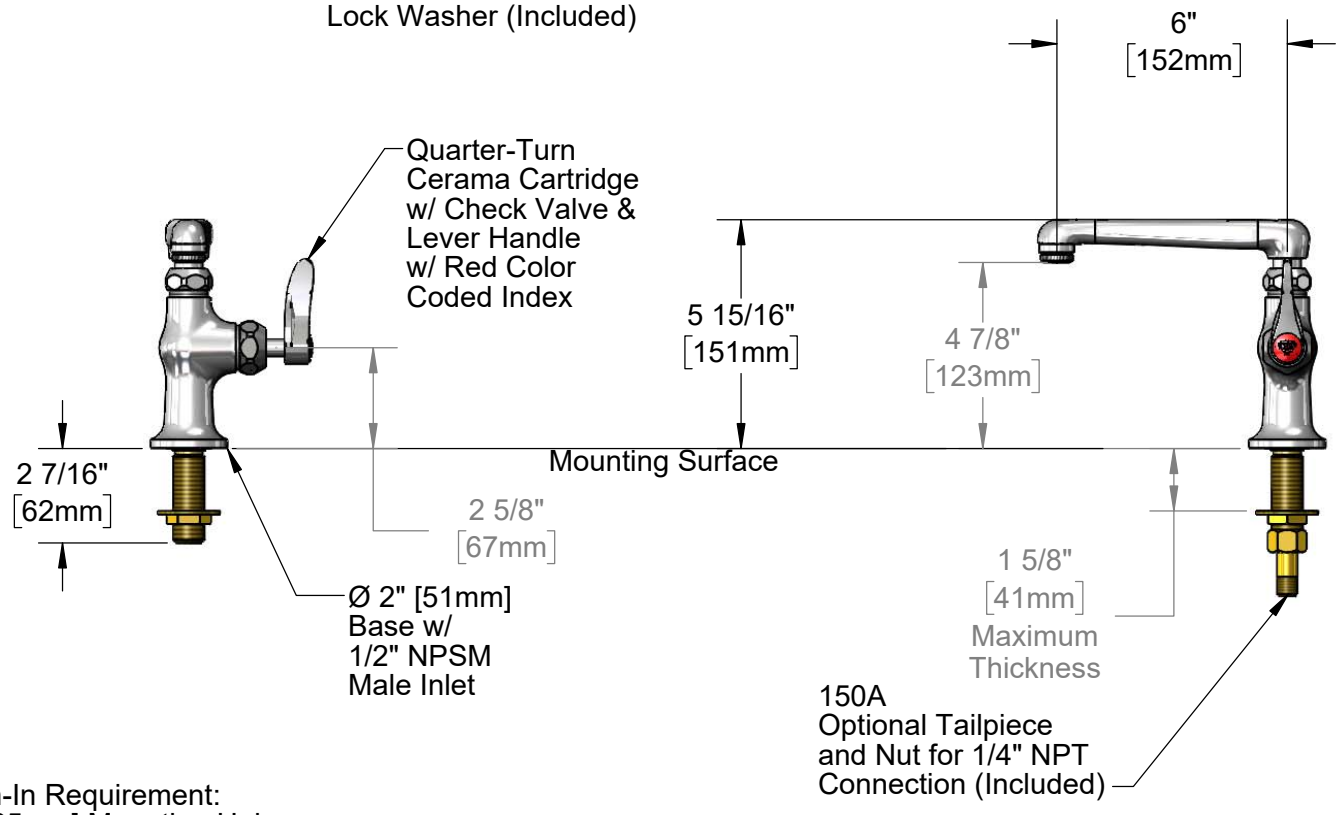

Rough-In Requirement:
∅1" [25mm] Mounting Hole

Product Specifications:

Single Hole Single Temperature Deck Mount Faucet, Quarter-Turn Cerama Cartridge w/ Check Valve, Lever Handle w/ Red Index, 6" Cast Spout w/ Stream Regulator Outlet & 1/2" NPSM Male Inlet

Product Compliance:

ASME A112.18.1 / CSA B125.1
NSF 61 - Section 9
NSF 372 (Low Lead Content)
ANSI A117.1 (ADA)

Drawn: MRC	Checked: JRM	Approved: JHB	Date: 03/01/18	Scale: 1:5	Sheet: 1 of 2

T&S BRASS AND BRONZE WORKS, INC.

2 Saddleback Cove / P.O. Box 1088
Travelers Rest, SC 29690

Travelers Rest, SC: 800-476-4103 • Simi Valley, CA: 800-423-0150 • Fax: 864-834-3518 • www.tsbrass.com

Model No.

B-0208-CR-HW

Item No.

ITEM NO.	SALES NO.	DESCRIPTION
1	0CS6-LT	6" Swivel Cast Spout w/ B-LT Stream Regulator Outlet
2	B-LT	Stream Regulator Outlet
3	001043-45	Washer
4	009538-45	Swivel Washer
5	011429-45	Swivel Sleeves (2)
6	001074-45	O-Ring
7	014200-45	Star Washer, Anti-Rotation
8	012394-25NS	Quarter-Turn Cerama Cartridge w/ Check Valve, RTC
9	001638-45NS	Lever Handle (New Style)
10	000925-45	Lab Handle Screw
11	001193-19NS	Red Button Index, Press-in
12	000999-45	Brass Lock Washer
13	002954-45	Shank Lock Nut
14	150A	1/4" NPT Tailpiece & Nut
15	012446-25NS	Quarter-Turn Cerama Cartridge w/ Check Valve, Handle, Red Index & Screw, RTC

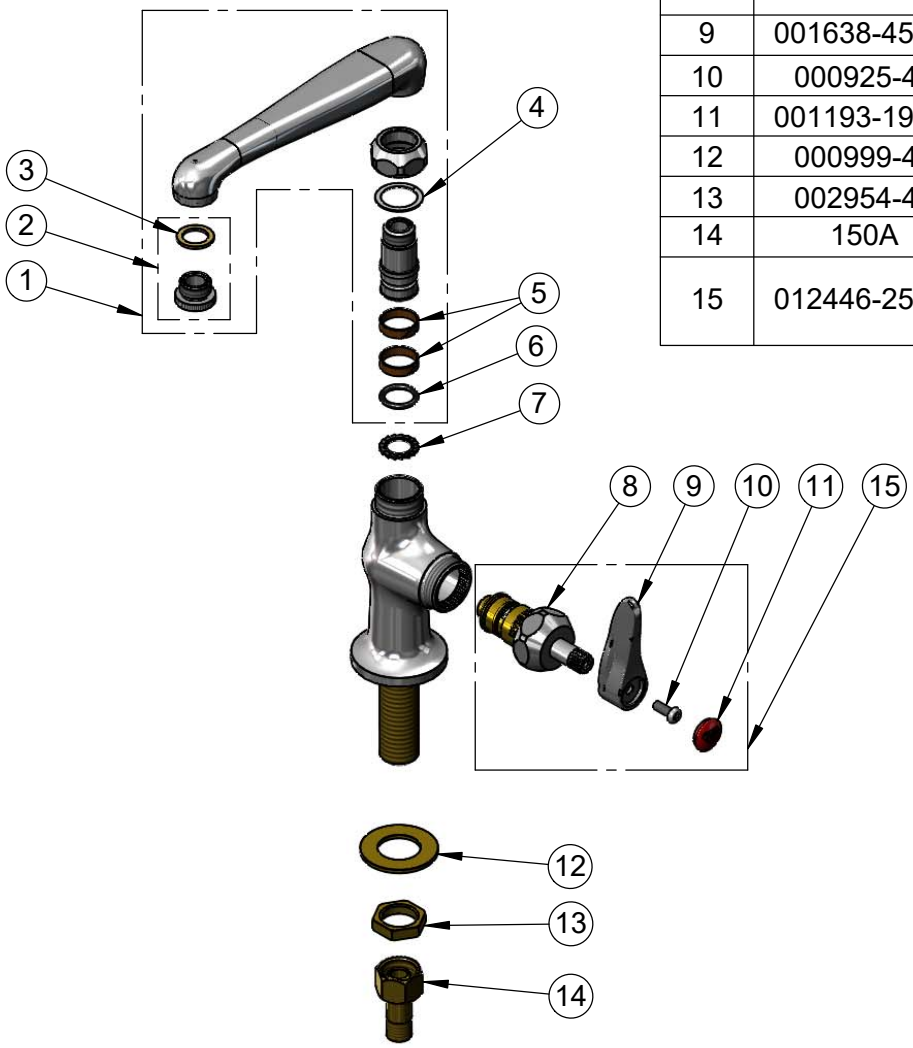

Product Specifications:

Single Hole Single Temperature Deck Mount Faucet, Quarter-Turn Cerama Cartridge w/ Check Valve, Lever Handle w/ Red Index, 6" Cast Spout w/ Stream Regulator Outlet & 1/2" NPSM Male Inlet

Product Compliance:

ASME A112.18.1 / CSA B125.1
NSF 61 - Section 9
NSF 372 (Low Lead Content)
ANSI A117.1 (ADA)

Drawn: MRC	Checked: JRM	Approved: JHB	Date: 03/01/18	Scale: NTS	Sheet: 2 of 2