81182
(HEAT SINK)

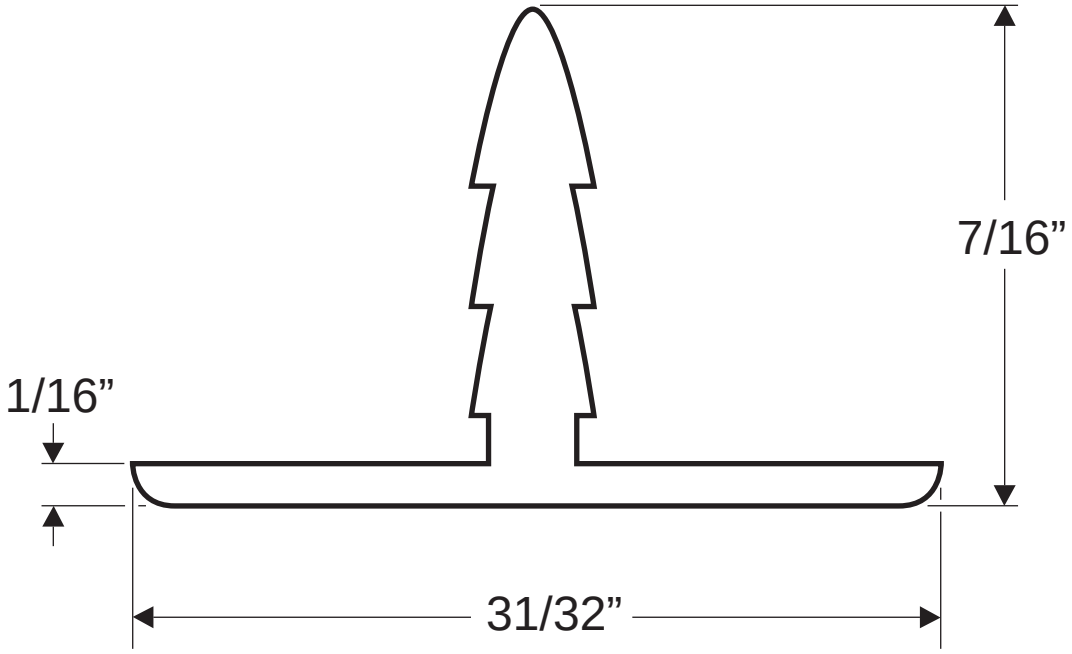

TO INSTALL: CUT GROOVE 1/16” WIDE x 7/16” DEEP (MIN).

NOTE: 5’ LONG

Copyright - 2007 Jacknob Corp. all rights reserved Revised - 11/04/09