# 4060, 4066
# (DOOR INSERT - BOTTOM 1”)

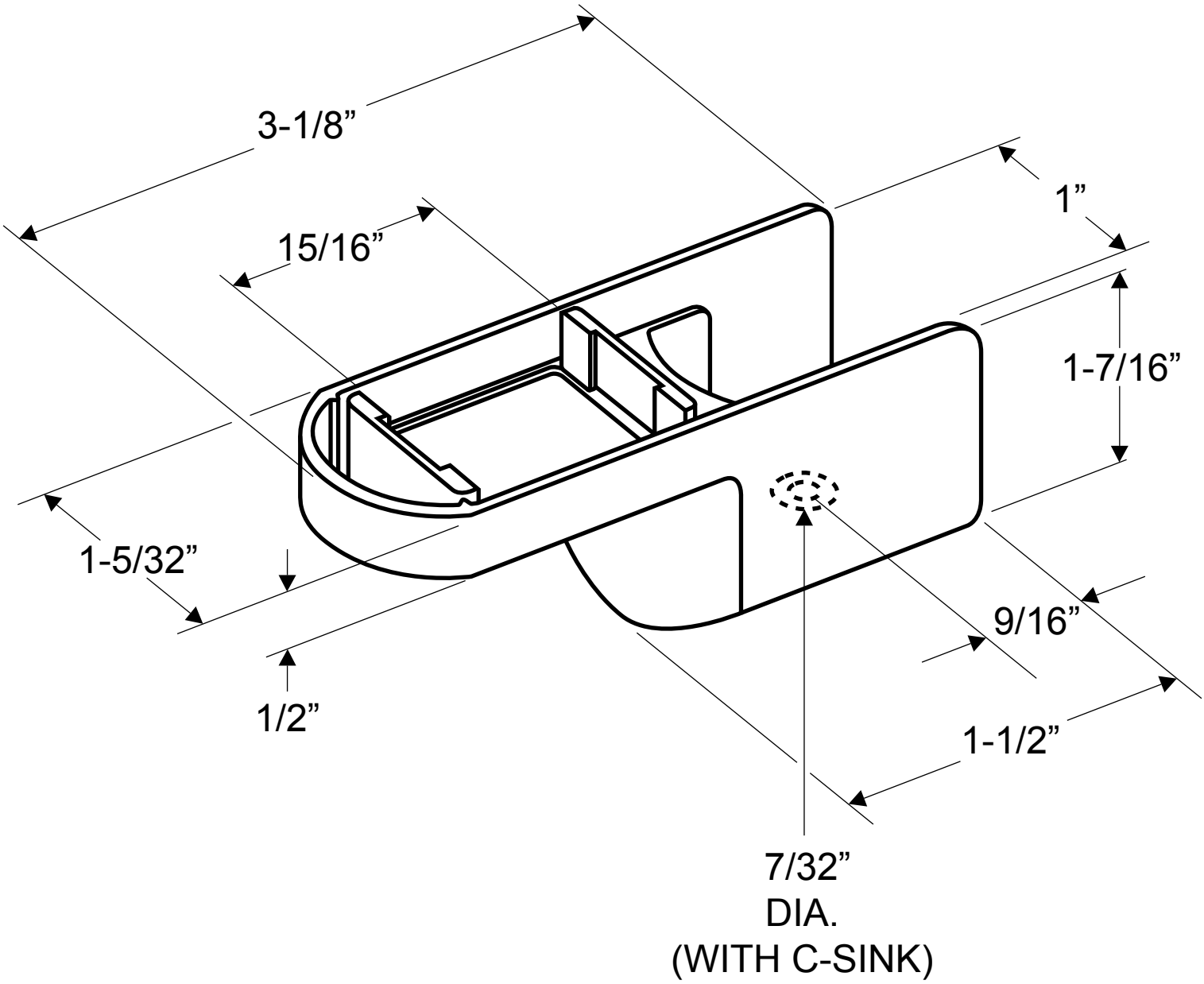


## NOTE: USED WITH 4540, 4546 TOP INSERT

Copyright - 2006 Jacknob Corp. all rights reserved Revised - 7/21/06