7113
(SURFACE MOUNTED HINGE - RH-IN/LH-OUT)

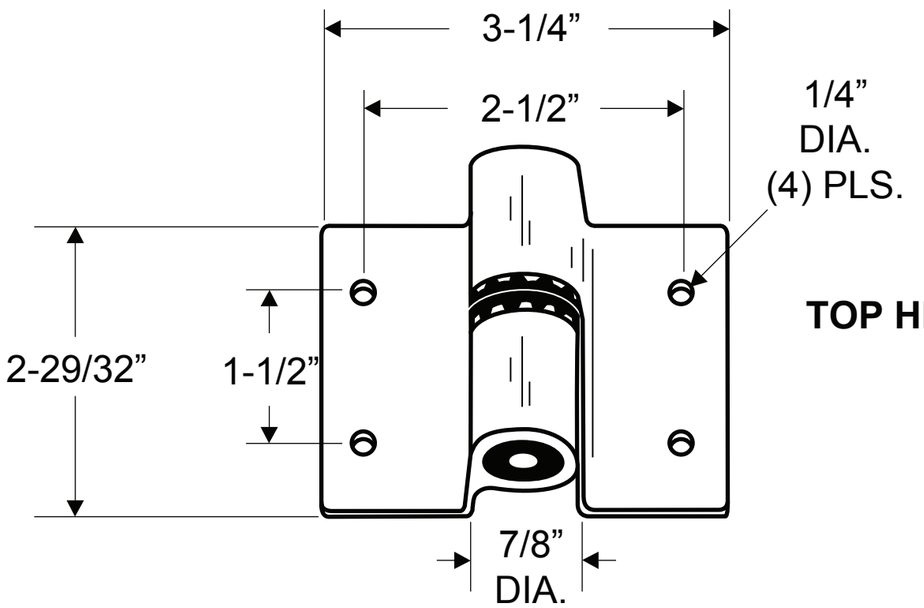

TOP HINGE

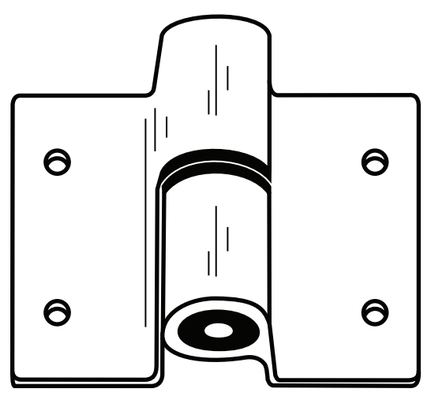

BOTTOM HINGE

NOTE: HINGE THICKNESS AT 1/8”
7133 TOP HINGE ONLY, 7143 BOTTOM HINGE ONLY
TOP AND BOTTOM HINGE DIMENSIONS ARE SAME

Copyright - 2006 Jacknob Corp. all rights reserved Revised - 3/21/07

INSTRUCTIONS FOR INSTALLING
7033, 7053, 7113 SURFACE MOUNTED HINGES

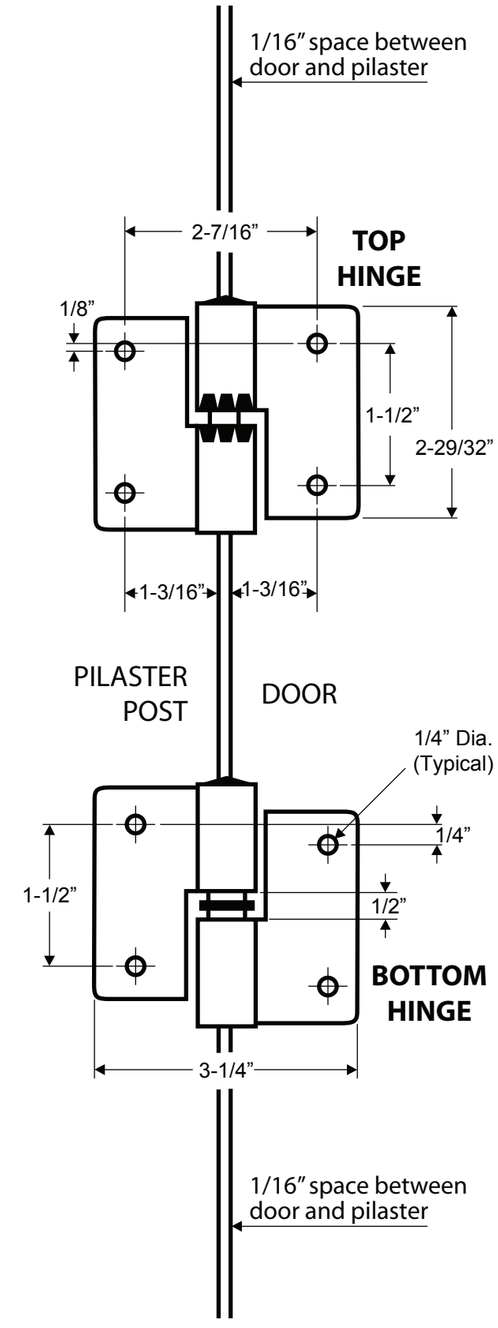

1. Locate and set hinge leafs to pilaster post as per drawing.
2. Locate and set **upper** hinge leaf to door. Adjust male cam as necessary to achieve desired closed or “at rest” position.
3. With door in “at rest” position, locate and set **lower** hinge leaf on door allowing 1/2” vertical space between hinge leaves as per drawing. This is to allow for the rise of the door when opening.
4. Install straight black hinge pin. Install retaining clip into pin to prevent the pin from coming out.
5. The hinges are handed for left hand (LH) or right hand (RH) swing. The same hinge may be used for LH inswing or RH outswing. The opposite hinge would be used for RH inswing and LH outswing.
6. To reverse the handedness of the hinge, remove the nylon inserts from the top hinge and insert them into the bottom hinge. Remove the plastic inserts from the bottom hinge and insert them into the top hinge. This will change the direction of swing.
7. To adjust position of door closing, drive pintle from bottom leaf of top door hinge and turn to desired position.

✻ WHEN SETTING HINGES WITH DOOR IN CLOSED POSITION ALLOW 1/2” SPACE FOR LIFT.

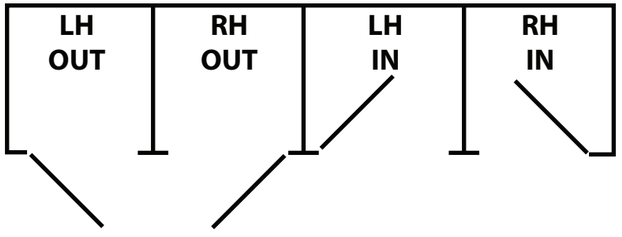

Copyright - 2008 Jacknob Corp. all rights reserved Revised - 01/02/08