ALL Delany Manual Concealed Valve Parts Breakdown

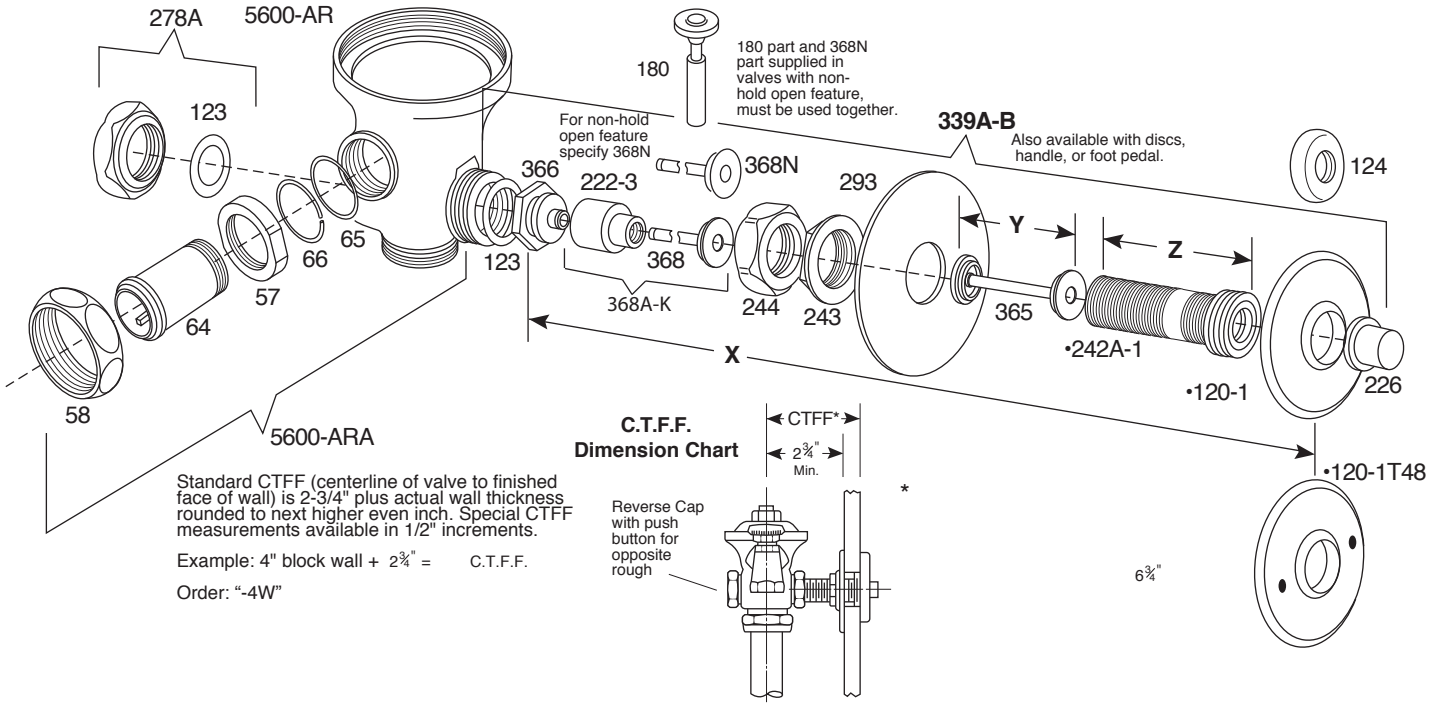

Standard CTFF (centerline of valve to finished face of wall) is 2-3/4" plus actual wall thickness rounded to next higher even inch. Special CTFF measurements available in 1/2" increments.

Example: 4" block wall + 2¾" = C.T.F.F.

Order: "-4W"

Delany Since 1879 Products™