5922-69
Combination Unit

☐ Model 5922-69 — Recessed *Bradex*®

☑ Seat Cover Dispenser/Dual Roll Tissue Dispenser

Product Materials

CABINET: 22 gauge stainless steel with exposed surfaces in architectural satin finish. Welded construction with burr-free edges.

FLANGE: 22 gauge stainless steel with exposed surfaces in architectural satin finish. One-piece seamless construction, 1" wide with ¼" return.

DOOR: 18 gauge stainless steel with full-length piano hinge and tumbler lock keyed like other Bradley units.

SPINDLES: polyethylene, non-removable by user.

Capacity

Toilet Seat Cover Dispensers — 1,000 standard single-fold or half-fold toilet seat covers; Toilet Tissue Dispensers — two standard core toilet tissue rolls through 5¼" in diameter.

Operation

Hinged access door permits servicing of components from one side.

Installation

Verify all rough-in dimensions prior to installation. Requires rough wall opening 15⅜"W x 28⅞"H x 4¼"D. Secure to framing with mounting screws (included) at holes provided. Recessed unit allows clearance for grab bar (not included) across front of unit.

Guide Specification

Recessed combination unit shall include toilet seat cover dispenser and toilet tissue dispenser, and be fabricated of stainless steel with seamless exposed surfaces in satin finish. Door and back panel shall be 18 gauge. Door shall have piano hinge and tumbler lock.

Overall dimensions: 17⅛"W x 30⅝"H x 4½"D.

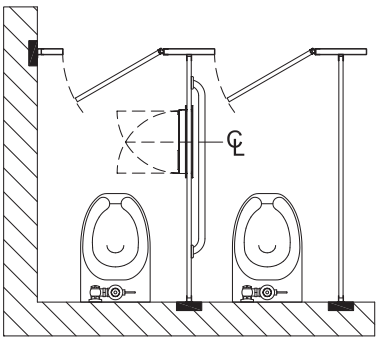

5900 Series Combination Units are to be installed so that doors open 90° to fill product and maintain waste container.

ADA Compliant

☑ Consult local and national accessibility codes for proper installation guidelines.

☑ Conformity and compliance to local and national codes is the responsibility of the installer.

Note: ADA requires a 1½" grab bar clearance to the wall. When fully recessed, this unit protrudes ¼" from the finished wall. A standard grab bar, when mounted over the unit, will not meet the ADA requirement of 1½".

Washroom Accessories
Document No. 8612

Orders composed of products indicated as *Bradex*® will be available to ship in three days after receipt of order at the factory. There is no pricing penalty for this service from Bradley.

This information is subject to change without notice.

3/20/2012

© 2012 Bradley

P.O. Box 309, Menomonee Falls, WI 53052-0309
Phone: 800.BRADLEY (800.272.3539) Fax: 262.253.4161
bradleycorp.com

Dimensions

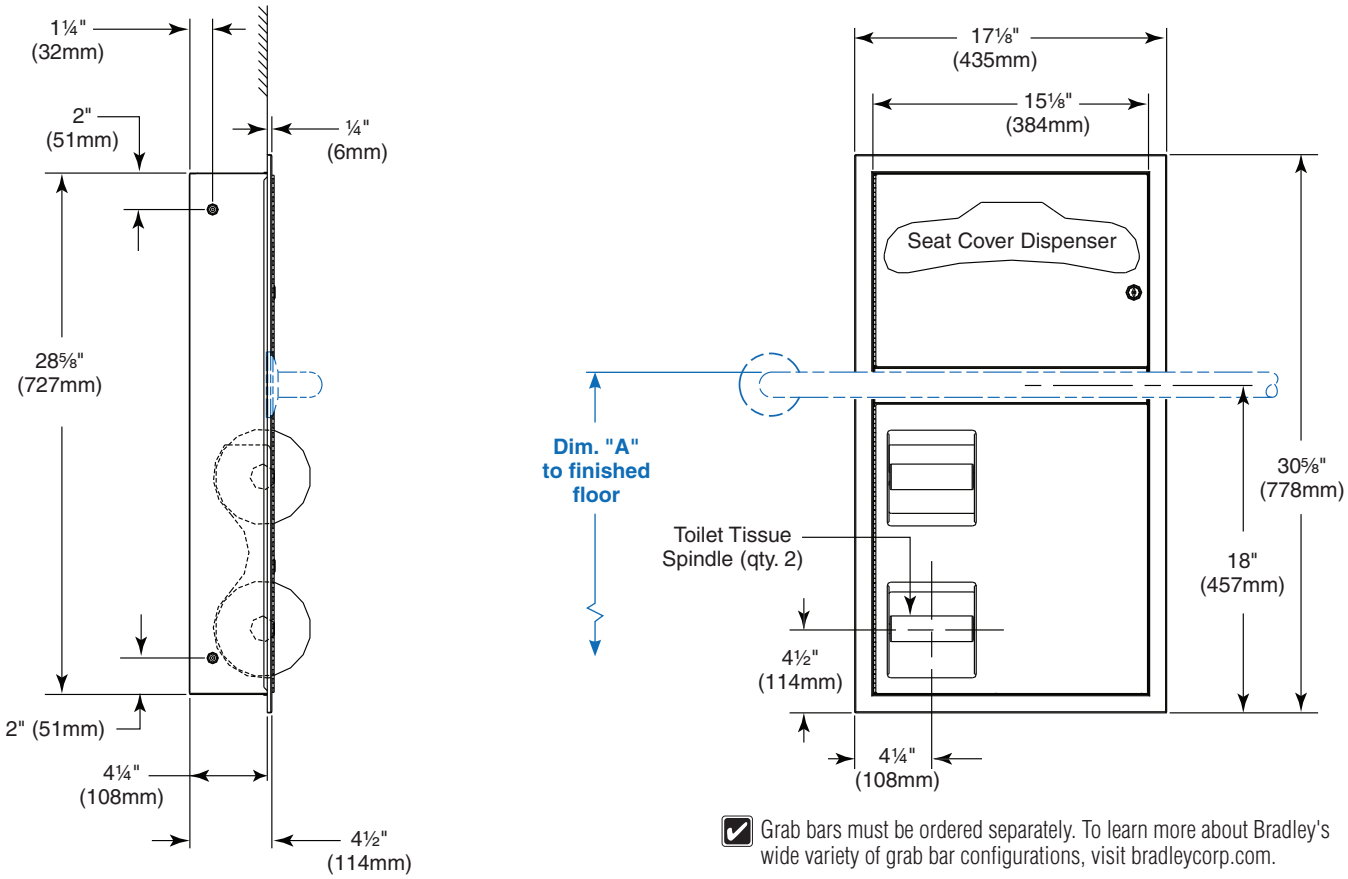

☑ Grab bars must be ordered separately. To learn more about Bradley's wide variety of grab bar configurations, visit bradleycorp.com.

Dim. "A" Key Surface:	For Dim. "A"	Top of Rough Wall Opening	Bottom of Rough Wall Opening	For Seat Cover Opening Top	For Bottom Toilet Paper Opening Lower Lip @ Dim. "A"
Top of 1½" grab bar to finished floor	36" (914mm)	47" (1194mm)	18⅛" (460mm)	45⅜" (1153mm)	17⁵⁄₁₆" (440mm)
	34½" (876mm)	45½" (1156mm)	16⅝" (422mm)	43⅞" (1114mm)	15¹³⁄₁₆" (402mm)
	33" (838mm)	44" (1118mm)	15⅛" (384mm)	42⅜" (1076mm)	14⁵⁄₁₆" (364mm)

Rough wall opening:	
Surface-Mount:	No rough opening, overall dimensions 15⅜" (391mm) Wide x 28⅞" (734mm) High x 4½" (114mm) Deep
Recessed:	15⅜" (391mm) Wide x 28⅞" (734mm) High x 4¼" (108mm) Deep
Semi-Recessed:	15⅜" (391mm) Wide x 28⅞" (734mm) High x 3¼" (83mm) Deep

Washroom Accessories
Document No. 8612

Orders composed of products indicated as ***Bradex***® will be available to ship in three days after receipt of order at the factory. There is no pricing penalty for this service from Bradley.

This information is subject to change without notice.

3/20/2012

© 2012 Bradley
P.O. Box 309, Menomonee Falls, WI 53052-0309
Phone: 800.BRADLEY (800.272.3539) Fax: 262.253.4161
bradleycorp.com