1764
(WALL BRACKET - ONE EAR 1”)

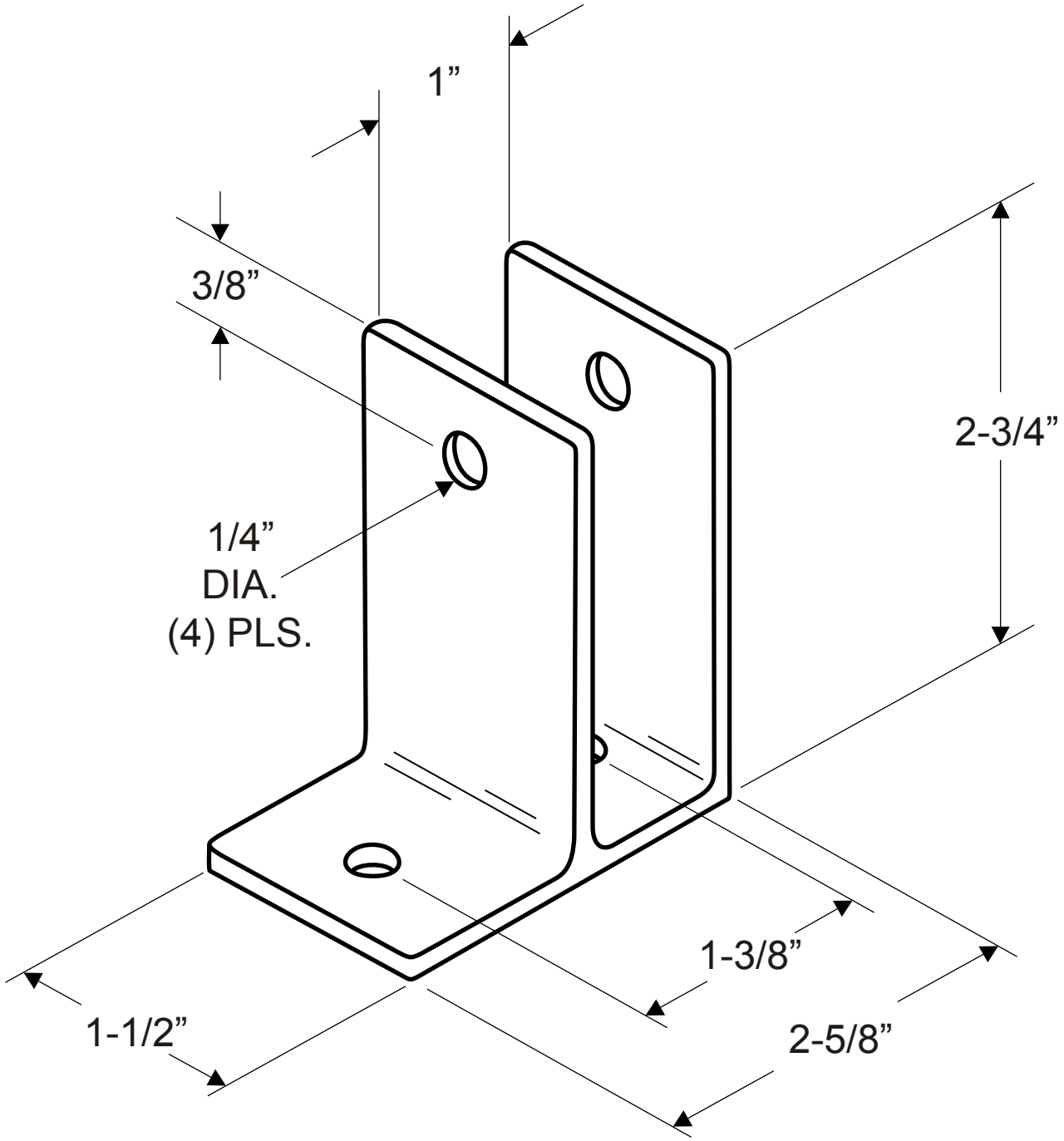

NOTE: ALL WALL THICKNESS AT 1/8”

Copyright - 2006 Jacknob Corp. all rights reserved Revised - 4/13/06