F452-1.5 FLUSHBOY

WATER SAVER URINAL FLUSH VALVE

(1.5gpf / 5.7 Lpf Per Flush)

Polished chrome plated flush valve, chloramine resistant diaphragm, 1.5 gallons per flush, externally adjustable for water conservation, with 1" vandle resistant capped screwdriver angle stop with back-check, renewable main valve seat, ADA compliant metal "Rubberflex" oscillating handle, "Turn-to-Silence" equipment, with "Kwikfit" threaded union tailpiece, vacuum breaker, wall flange, spud nut and spud flange for 1¼" top spud.

Variations

- ☐ C – 3" Oscillating disc
- ☐ L – Handle or push-button on front of valve
- ☐ T6 – Heavy cast wall flange with allen head set screw
- ☐ T36 – Solid ring wall support for flush connection
- ☐ T42 – Sweat adapter kit for stop
- ☐ T46 – Split ring wall support for flush connection
- ☐ T106 –Mashaerator self cleaning bypass diaphragm

Remarks

✱ *For use with 1.5 gallons water saver urinals*

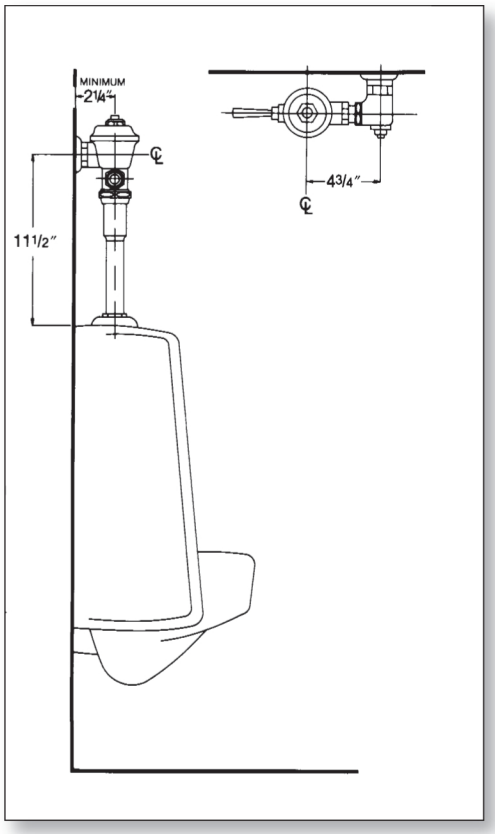

Delany Products Since 1879

P.O. Box 411 · Charlottesville · VA · 22902 • USA
Phone: (434) 296-0166 · Fax (434) 977-3596
Email: info@delanyproducts.com
Web: www.delanyproducts.com

©2014