T&S BRASS AND BRONZE WORKS, INC.
2 SADDLEBACK COVE / P.O. BOX 1088 / TRAVELERS REST, SC 29690
PHONE 800-476-4103 FAX 864- 834-3518

REG.#A2601
ISO #9002

Model No.
B-0315-LN
Item No.:

Job Name:

Architect/Engineer Approval:

Notes:

ADA COMPLIANT

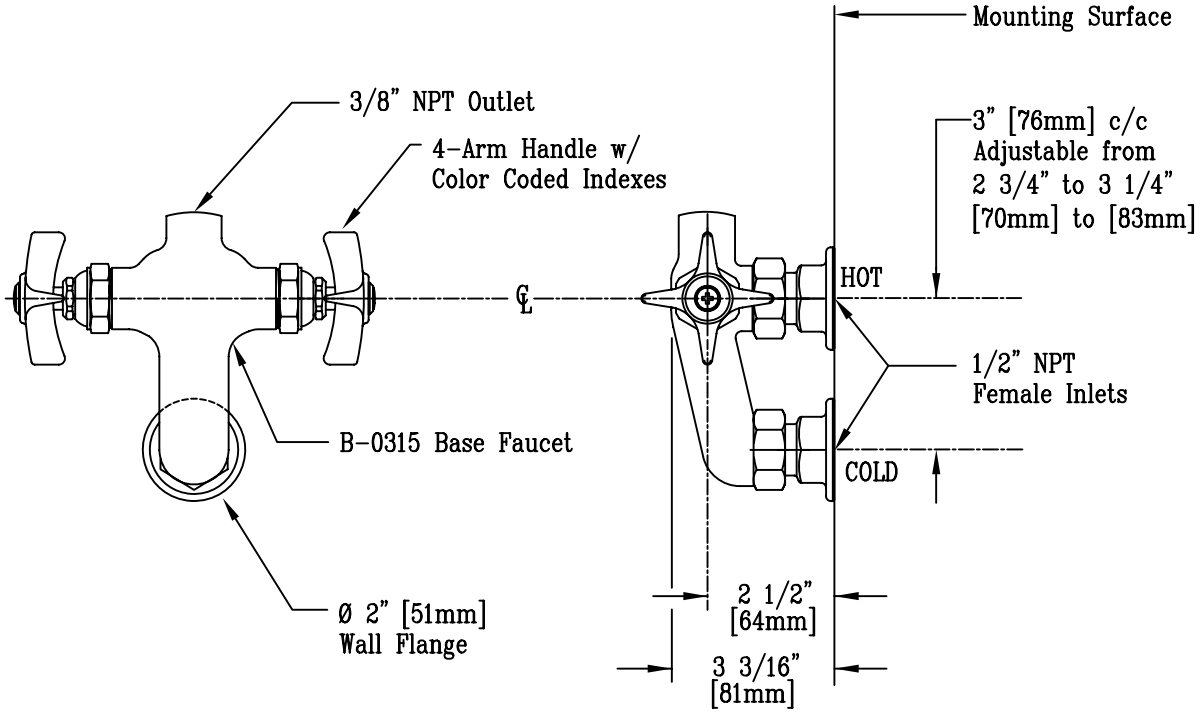

Product Description:
Vertical Mixing Faucet w/ 4-Arm Handles, 1/2" NPT Inlets, Less Nozzle

Drawn:	Checked	Scale:
DHL	JRM	1:4
Approved		Date:
JHB		02/07/08

T&S BRASS AND BRONZE WORKS, INC.
2 SADDLEBACK COVE / P.O. BOX 1088 / TRAVELERS REST, SC 29690
PHONE 800-476-4103 FAX 864- 834-3518

REG.#A2601
ISO #9002

Model No.
B-0316-LN
Item No.:

Job Name:

Architect/Engineer Approval:

Notes:

ADA COMPLIANT

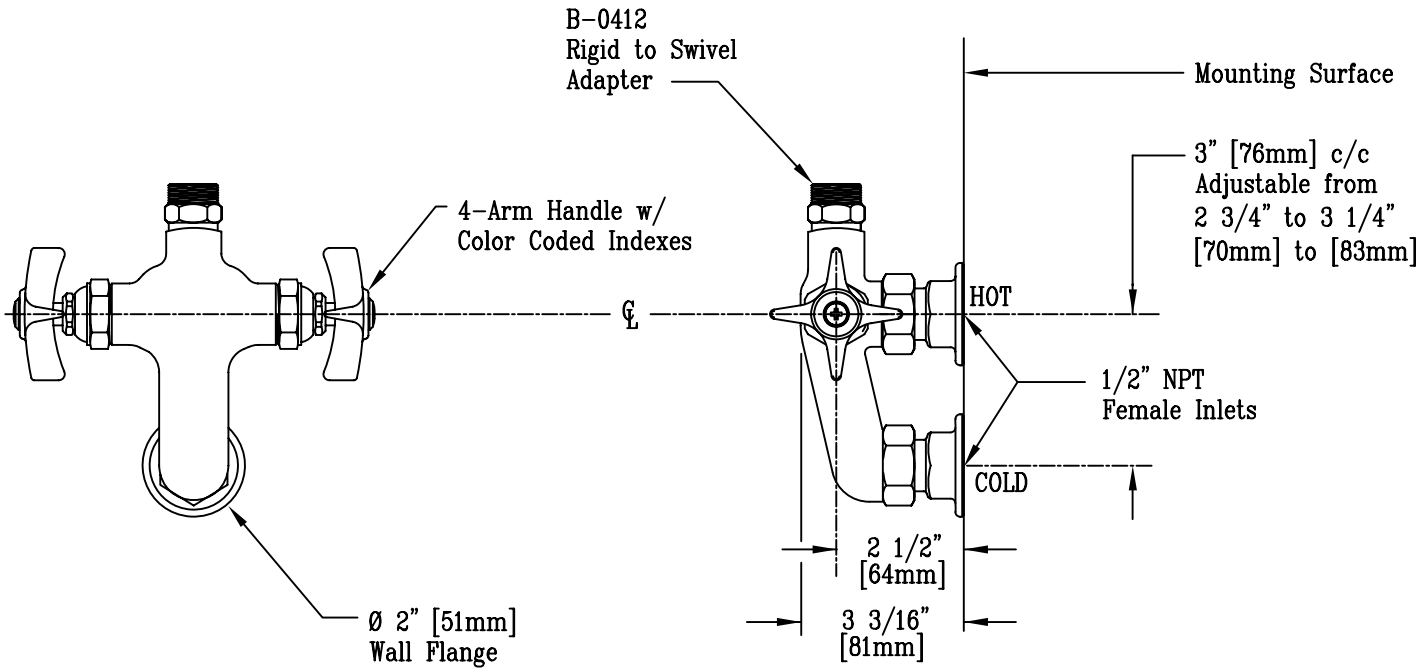

Product Description:	Drawn:	Checked	Scale:
Wall Mount Mixing Faucet Less Nozzle w/ Rigid to Swivel Adapter	DHL	JRM	1:4
	Approved		Date:
	JHB		02/07/08